BEFOUR

PROFESSIONAL HEALTHCARE SCALES

Powered by: **Opti-Height** Optical Stadiometer System

MODEL MX910

Befour's *MX910 Measurement Station is unlike any other scale on the market!*

The exclusive Opti-Height technology enables fast and accurate height measurements through state-of-the-art design and expert engineering. The 360° ergonomic hand grip and robust headpiece ensures the smoothest, simplest and safest height measurement process available in healthcare. The measurement slide encompasses *Smart Position Technology* meaning it 'stays put' where last left so height rod is always in the ready position for the next patient.

The ***"tilt & roll" design*** makes transportation of the scale effortless. Operation is simple and intuitive, even for the first time user.

The scale offers many ***advanced features which come standard,*** including Befour's proprietary MotionLock technology and ECO Weigh battery system, for years of use and allows the scale to be used anywhere.

All Befour scales are **built to last,** constructed of anodized aluminum, backed by an **'industry leading' 3-year warranty** and **USA-Made.**

EMR READY

HANDS-FREE WEIGHING

FEATURES & BENEFITS

Optical **Height Measurement:** Simply lower the foldable headpiece to rest on top of head, press HEIGHT & measurement occurs instantaneously. Height can be viewed in selectable units and displays automatically

Integrated "Active" Handrail: Allows patient to grasp handrail for support while weight is accurately calculated

Ergonomic Wrap-Around Handrail: Unique, heavy-duty, design does not interfere with foot positioning and adds security and stability for patients of all sizes

Quick Assembly: Requires only 5 minute assembly

"Tilt & Roll" Design: Safely weigh patient when scale is stationary, but ready to move at any time

Display Console: LB/KG lockout, programmable settings, BMI output, auto zero, recall, reweigh ability, and more

MotionLock

MotionLock automatically facilitates quick & accurate weight, even for the most unsteady user – no intervention of the care provider or patient required

ENVIRONMENTALLY FRIENDLY · PROUDLY MADE IN THE USA · CERTIFIED SBA SMALL BUSINESS

DISPLAY CONSOLE

Display is used across all Befour's medical scales: Seamlessly move from one model to another with ease

Displays weight, height, and BMI on a single screen

EMR connectivity via serial output or optional wireless module

Programmable User Settings can be set to auto-off, "Hands-Free" Weighing, etc.

'ECO Weigh' battery system provides 100,000 weighings per set of (4) D-cell alkaline batteries (included)

LB/KG Lockout: Toggle between or set to display only your desired unit of measure

3-segment battery life indicator

Large 1" LCD digits

No AC outlet or recharging needed

Tilt & Roll Handrail Scale with BMI & Height Rod

MODEL MX910

SCALE SPECIFICATIONS	
SCALE HEIGHT	42”
PLATFORM DIMENSIONS	22” W x 25” D x 2” H
SYSTEM WEIGHT	48 lbs
WEIGHT CAPACITY	1000 lbs (450 kg)
RESOLUTION	0.1 lb (0.05 kg)
ACCURACY	± 0.1 lb (0.05 kg)
POWER SOURCE	4 D-cell alkaline batteries (incl)
BATTERY LIFE	100,000 weighings
CONNECTIVITY	USB serial or optional wireless
DISPLAY READOUT	1” LCD digits
HEIGHT ROD RANGE	25-94” / (~63-238cm)
HEIGHT ROD ACCURACY	± 0.1 in (0.2 cm)
HEIGHT DISPLAY FORMATS	In, Ft & In, Cm
WARRANTY	3 years

SHIPPING SPECIFICATIONS	
PACKAGED WEIGHT	70 lbs
PACKAGE DIMENSIONS	Box (27” x 24” x 43”)
SHIPPING METHOD	Freight

To move to a new location, simply tilt the scale back on its large 3” wheels and roll away.

Scale fits through all standard doorways.

DIMENSIONS

Allow 1” perimeter space - scale should not touch wall

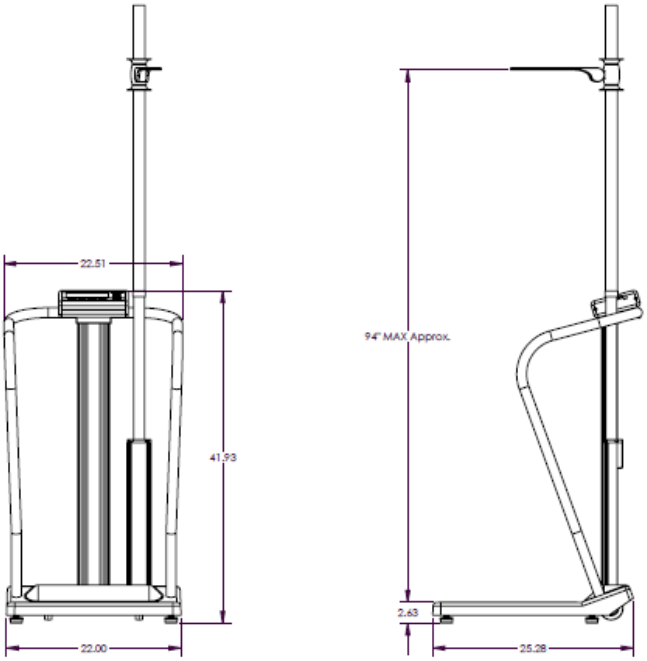

OPTI-HEIGHT DIGITAL HEIGHT ROD

Height rod is both digital and integrated into scale for automatic BMI calculation. Unique design has extended measuring range with no exposed cables and rotates 360° for easy positioning of headpiece.

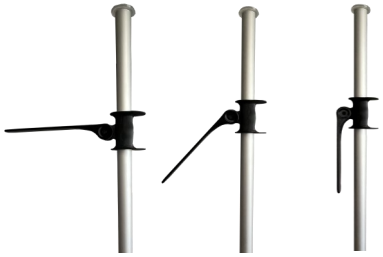

Measurement Slide has **Smart Position Technology** and stays where last left so it’s always ready to measure.

BEFOUR

Befour Inc. | 102 Progress Drive, Saukville, WI 53080 | 800.367.7109 | f: 262.284.5966 | befour.com | sales@befour.com