BEFOUR

PROFESSIONAL HEALTHCARE SCALES

Measurement Station Column Scale with BMI & Height Rod

MODEL MX805

The MX805 measurement station offers an attractive light-weight all-aluminum design, featuring a rugged cast platform and anodized column. The robust display console, positioned at a height of 42", offers optimal viewing.

With its ***integrated digital height rod,*** weight, height, and BMI are accurately calculated and immediately displayed. It features a 750 pound capacity and a height rod that rotates 360° for easier positioning of head piece.
Operation is simple and intuitive, even for the first time user. This scale offers many ***advanced features which come standard,*** including Befour's proprietary MotionLock technology and ECO Weigh battery system for years of use and allows the scale to be used anywhere.
All Befour scales are **built to last,** constructed of anodized aluminum, backed by an **'industry leading' 3-year warranty** and are **Made in the USA.**

FEATURES & BENEFITS

Pin point accuracy of ± 0.1lb

High Capacity: 750 pounds

Display Console: LB/KG lockout, programmable settings, BMI output, auto zero, recall, reweigh ability, and more

Digital Height Measurement: Simply press HEIGHT & raise the foldable headpiece. Height can be viewed in selectable units & displays automatically

Built to Last: Rugged, non-corroding all-aluminum design weighs only 17 pounds.

MotionLock automatically facilitates quick & accurate weight, even for the most unsteady user – no intervention of the care provider or patient required

DISPLAY CONSOLE

Display is used across all Befour's medical scales: Seamlessly move from one model to another with ease

Displays weight, height, and BMI on a single screen

EMR connectivity via serial output or optional wireless module

Programmable User Settings can be set to auto-off, "Hands-Free" Weighing, etc.

'ECO Weigh' battery system provides 100,000 weighings per set of (4) D-cell alkaline batteries (included)

LB/KG Lockout: Toggle between or set to display only your desired unit of measure

3-segment battery life indicator

Large 1" LCD digits

No AC outlet or recharging needed

Measurement Station Column Scale with BMI & Height Rod

MODEL MX805

SCALE SPECIFICATIONS	
SCALE HEIGHT	42”
PLATFORM DIMENSIONS	16” W x 18” D x 1-3/4” H
SYSTEM WEIGHT	17 lbs
WEIGHT CAPACITY	750 lbs (340 kg)
RESOLUTION	0.1 lb (0.05 kg)
ACCURACY	± 0.1 lb (0.05 kg)
POWER SOURCE	4 D-cell alkaline batteries (incl)
BATTERY LIFE	100,000 weighings
CONNECTIVITY	USB serial or optional wireless
DISPLAY READOUT	1” LCD digits
HEIGHT ROD RANGE	38-88” / (97-225 cm)
HEIGHT ROD ACCURACY	± 0.1 in (0.2 cm)
HEIGHT DISPLAY FORMATS	In, Ft & In, Cm
WARRANTY	3 years

SHIPPING SPECIFICATIONS	
PACKAGED WEIGHT	29 lbs
PACKAGE DIMENSIONS	Box (45” x 18” x 10”)
SHIPPING METHOD	UPS Package

DIMENSIONS

Allow 1” perimeter space - scale should not touch wall

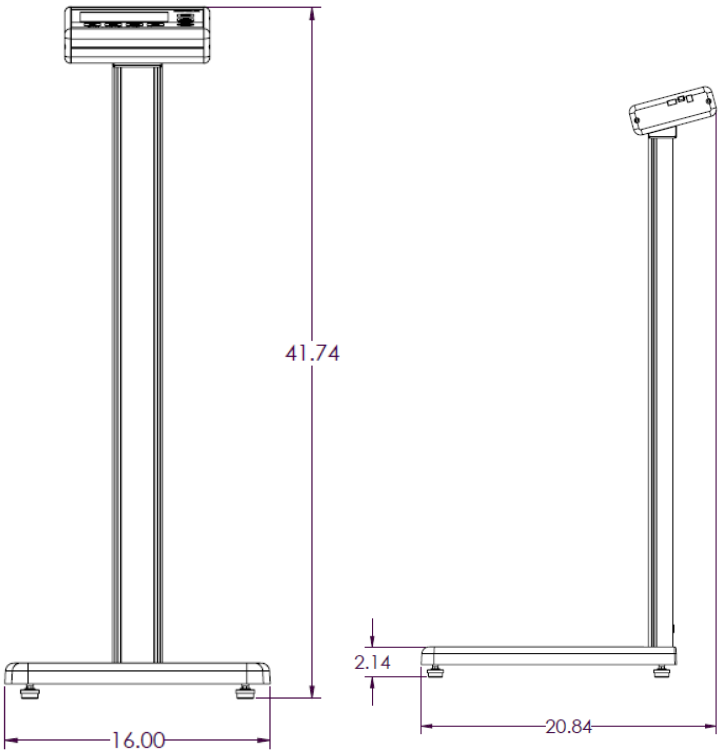

INTEGRATED DIGITAL HEIGHT ROD

Height rod is both digital and integrated into scale for automatic BMI calculation. Unique design has extended measuring range with no exposed cables and rotates 360° for easy positioning of headpiece.

BEFOUR

Befour Inc. | 102 Progress Drive, Saukville, WI 53080 | 800.367.7109 | f: 262.284.5966 | befour.com | sales@befour.com