BEFOUR

PROFESSIONAL HEALTHCARE SCALES

Wheelchair Scale-Extra Deep
Folding - Dual Ramp - Handrail

MODEL MX490D

Befour's largest portable scale includes an 'active handrail' that comes standard and can be used as a wheelchair, stand-on or chair scale. The folding, dual ramps allow for pass-through weighing for bariatric wheelchairs.

EMR READY

HANDS-FREE WEIGHING

The ***"fold & roll" design*** easily folds into a small footprint for convenient storage or ease of moving to and from locations.

The scale offers many ***advanced features which come standard,*** including Befour's proprietary MotionLock technology and ECO Weigh battery system for years of use and allows the scale to be used anywhere. All Befour scales are **built to last,** constructed of anodized aluminum, backed by an **'industry leading' 3-year warranty** and are **Made in the USA.**

FEATURES & BENEFITS

Generous Platform Size: 32"x41" platform accommodates wider bariatric wheelchairs.

Integrated "Active" Handrail: A standard feature, allowing patient to grasp handrail for support while weight is accurately calculated.

Tare Function: One-button retrieval and subtraction of wheelchair weight to determine net weight.

Fully Assembled: Arrives ready for use; simply insert the provided leveling feet and batteries.

"Fold & Roll" Design: Safely weigh patient when scale is stationary, but platform folds for less space and is ready to move at any time.

Display Console: Display is Integrated into handrail with no exposed wires and pivots 320° for optimal viewing. Also includes LB/KG lockout, programmable settings, BMI output,, auto zero, recall, reweigh ability, and more.

MotionLock

MotionLock automatically facilitates quick & accurate weight, even for the most unsteady user – no intervention of the care provider or patient required.

ENVIRONMENTALLY FRIENDLY · PROUDLY MADE IN THE USA · CERTIFIED SBA SMALL BUSINESS

DISPLAY CONSOLE

Display is used across all Befour's medical scales: Seamlessly move from one model to another with ease

Displays weight, height, and BMI on a single screen

EMR connectivity via serial output or optional wireless module

Programmable User Settings can be set to auto-off, "Hands-Free" Weighing, etc.

'ECO Weigh' battery system provides 100,000 weighings per set of (4) D-cell alkaline batteries (included)

LB/KG Lockout: Toggle between or set to display only your desired unit of measure

3-segment battery life indicator

Large 1" LCD digits

No AC outlet or recharging needed

Wheelchair Scale-Extra Deep

MODEL MX490D

SCALE SPECIFICATIONS	
SCALE HEIGHT	45”
PLATFORM DIMENSIONS	32” W x 41” D x 2” H
SYSTEM WEIGHT	100 lbs
WEIGHT CAPACITY	1000 lbs (450 kg)
RESOLUTION	0.1 lb (0.05 kg)
ACCURACY	± 0.1 lb (0.05 kg)
POWER SOURCE	4 D-cell alkaline batteries (incl)
BATTERY LIFE	100,000 weighings
CONNECTIVITY	USB serial or optional wireless
DISPLAY READOUT	1” LCD digits
WARRANTY	3 years

SHIPPING SPECIFICATIONS	
PACKAGED WEIGHT	116 lbs
PACKAGE DIMENSIONS	Box (48” x 35” x 14”)
SHIPPING METHOD	Freight

DIMENSIONS

Allow 1” perimeter space - scale should not touch wall

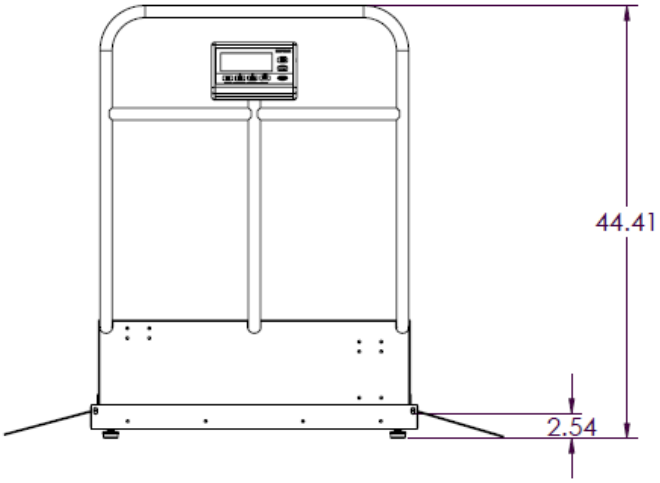

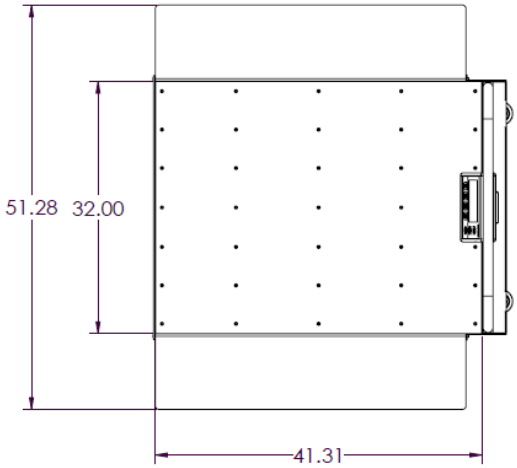

Folded scale rolls effortlessly to the next location on four hidden wheels, two - pivot.

FOLD & ROLL TRANSPORT

Footprint of folded scale is 32” x 12”, is self-supporting for safe transport and storage, and will fit through all standard doorways.

BEFOUR

Befour Inc. | 102 Progress Drive, Saukville, WI 53080 | 800.367.7109 | f: 262.284.5966 | befour.com | sales@befour.com