BEFOUR

PROFESSIONAL HEALTHCARE SCALES

Tilt & Roll Wheelchair Scale with Handrail

MODEL MX450 & MX450D

This versatile scale can be used as a wheelchair, handrail, or chair scale. Single ramp can be mounted on either side, while the dual ramp version allows for pass-through weighing. The ramps also fold up for use as a stand-on scale and the active handrail can be grasped during weighing.

The **"tilt & roll" design and large wheels** makes transportation of the scale effortless when moving from room to room.
The scale offers many **advanced features which come standard,** including Befour's proprietary MotionLock technology and ECO Weigh battery system for years of use and allows the scale to be used anywhere.
All Befour scales are **built to last,** constructed of anodized aluminum, backed by an **'industry leading' 3-year warranty** and are **Made in the USA.**

FEATURES & BENEFITS:

Generous platform size: 28" x 32" platform accommodates most wheelchairs

Pivoting Console: Pivots 320º for optimal viewing

Integrated "Active" Handrail: When used as a stand-on scale, patients can grasp handrail for support and weight is accurately calculated

Simple Assembly: Minimal set-up required

"Tilt & Roll" Design: Safely weigh patient when scale is stationary, but ready to move at any time

Display Console: LB/KG lockout, programmable settings, BMI output, auto zero, recall, reweigh ability, and more

MotionLock automatically facilitates quick & accurate weight, even for the most unsteady user – no intervention of the care provider or patient required

DISPLAY CONSOLE

Display is used across all Befour's medical scales: Seamlessly move from one model to another with ease

Displays weight, height, and BMI on a single screen

EMR connectivity via serial output or optional wireless module

Programmable User Settings can be set to auto-off, "Hands-Free" Weighing, etc.

'ECO Weigh' battery system provides 100,000 weighings per set of (4) D-cell alkaline batteries (included)

LB/KG Lockout: Toggle between or set to display only your desired unit of measure

3-segment battery life indicator

Large 1" LCD digits

No AC outlet or recharging needed

Tilt & Roll Wheelchair Scale with Handrail

MODEL MX450 & MX450D

SCALE SPECIFICATIONS	
SCALE HEIGHT	45”
PLATFORM DIMENSIONS	28”W x 32”D x 2”H
SYSTEM WEIGHT	65 lbs
WEIGHT CAPACITY	1000 lbs (450 kg)
RESOLUTION	0.1 lb (0.05 kg)
ACCURACY	± 0.1 lb (0.05 kg)
POWER SOURCE	4 D-cell alkaline batteries
BATTERY LIFE	100,000 weighings
CONNECTIVITY	USB serial or optional wireless
DISPLAY READOUT	1” LCD digits
WARRANTY	3 years

SHIPPING SPECIFICATIONS	
PACKAGED WEIGHT	78 lbs
PACKAGE DIMENSIONS	Box (48” x 33” x 9”)
SHIPPING METHOD	Freight

DIMENSIONS

Allow 1” perimeter space - scale should not touch wall

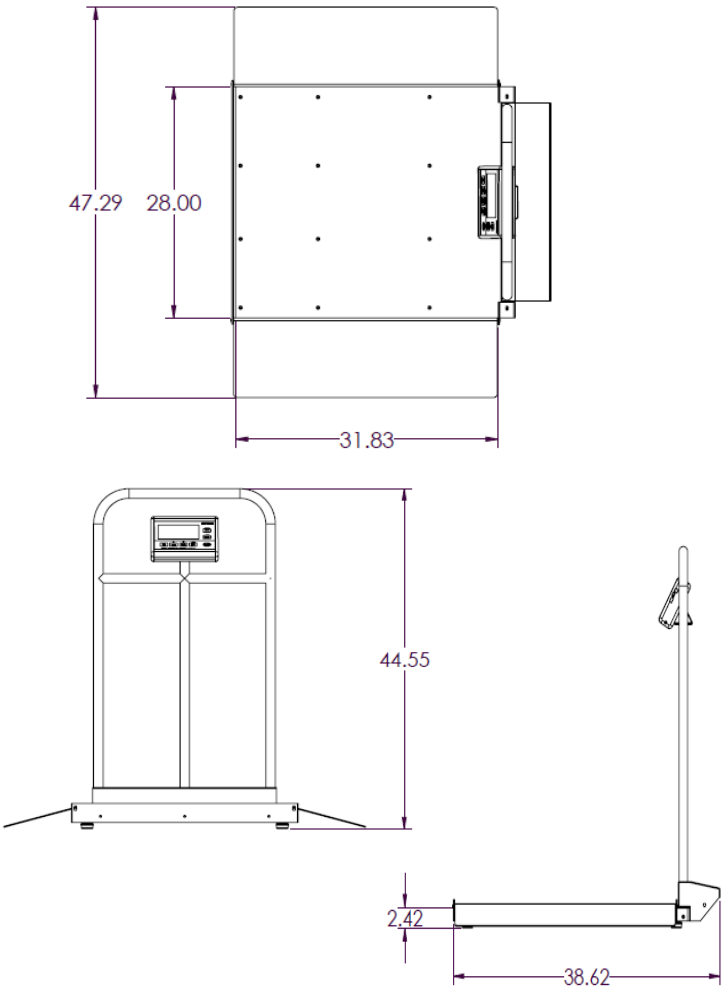

MX450 = Single Ramp

MX450D = Dual Ramp

TILT & ROLL

Convenient “Tilt & Roll” feature allows for easy transport to any location. Simply tilt scale back and gently roll forward.

BEFOUR

Befour Inc. | 102 Progress Drive, Saukville, WI 53080 | 800.367.7109 | f: 262.284.5966 | befour.com | sales@befour.com