BEFOUR

PROFESSIONAL HEALTHCARE SCALES

Tilt & Roll Space-Saving Scale Compact Handgrip with BMI

MODEL MX306

With its compact design, the MX306 scale provides the security of a patient handgrip, while taking up minimal floor space. Patients can conveniently grasp the handgrip, all while the weight measurement is captured simply, quickly and accurately.

The ***"tilt & roll" design and robust wheels*** makes transportation of the scale effortless. Simply tilt back and roll to next location.
Operation is simple and intuitive, even for the first time user.
The scale offers many ***advanced features which come standard,*** including Befour's proprietary MotionLock technology and ECO Weigh battery system for years of use and allows the scale to be used anywhere.
All Befour scales are **built to last,** constructed of anodized aluminum, backed by an **'industry leading' 3-year warranty** and are **Made in the USA.**

EMR READY

HANDS-FREE WEIGHING

FEATURES & BENEFITS

Integrated "Active" Handrail: Allows patient to grasp handrail for support while weight is accurately calculated

Stable Handgrip: Unique, heavy-duty, design provides security without taking up space.

"Tilt & Roll" Design: Safely weigh patient when scale is stationary, but ready to move at any time

MotionLock

MotionLock automatically facilitates quick & accurate weight, even for the most unsteady user – no intervention of the care provider or patient required

ENVIRONMENTALLY FRIENDLY · PROUDLY MADE IN THE USA · CERTIFIED SBA SMALL BUSINESS

DISPLAY CONSOLE

Display is used across all Befour's medical scales: Seamlessly move from one model to another with ease

Displays weight, height, and BMI on a single screen

EMR connectivity via serial output or optional wireless module

Programmable User Settings can be set to auto-off, "Hands-Free" Weighing, etc.

'ECO Weigh' battery system provides 100,000 weighings per set of (4) D-cell alkaline batteries (included)

LB/KG Lockout: Toggle between or set to display only your desired unit of measure

3-segment battery life indicator

Large 1" LCD digits

No AC outlet or recharging needed

Tilt & Roll Space-Saving Handgrip Scale with BMI

MODEL MX306

SCALE SPECIFICATIONS	
SCALE HEIGHT	42”
PLATFORM DIMENSIONS	16” W x 18” D x 1-3/4” H
SYSTEM WEIGHT	31 lbs
WEIGHT CAPACITY	750 lbs (340 kg)
RESOLUTION	0.1 lb (0.05 kg)
ACCURACY	± 0.1 lb (0.05 kg)
POWER SOURCE	4 D-cell alkaline batteries (incl)
BATTERY LIFE	100,000 weighings
CONNECTIVITY	USB serial or optional wireless
DISPLAY READOUT	1” LCD digits
WARRANTY	3 years

SHIPPING SPECIFICATIONS	
PACKAGED WEIGHT	39 lbs
PACKAGE DIMENSIONS	Box (45” x 18” x 10”)
SHIPPING METHOD	UPS Package

DIMENSIONS

Allow 1” perimeter space - scale should not touch wall

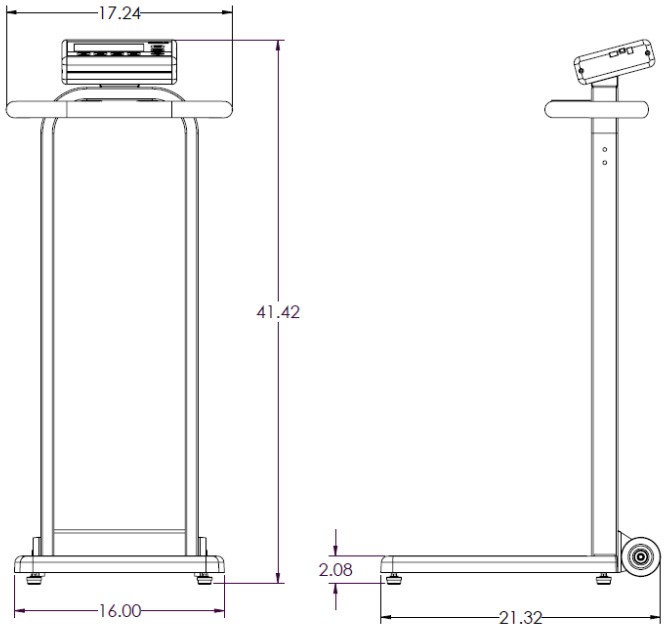

TRANSPORT WHEELS

To move to a new location, simply tilt the scale back on its large 3” wheels and roll away. The scale fits through all standard doorways.

BEFOUR

Befour Inc. | 102 Progress Drive, Saukville, WI 53080 | 800.367.7109 | f: 262.284.5966 | befour.com | sales@befour.com