BEFOUR

PROFESSIONAL HEALTHCARE SCALES

Physician Column Scale with BMI

MODEL MX305

The MX305 is an attractive scale featuring a light-weight, all-aluminum design, offering both accuracy and quality construction for years of use.

This scale is straight-forward in design, yet offers superior features, such as a high weight capacity of 750 lbs, Body Mass Index (BMI) calculator and easy viewing with a display height of 42", making this scale ideal for physician clinics and areas where a small footprint is available.

Operation is simple and intuitive, even for the first time user.
The scale offers many ***advanced features which come standard,*** including Befour's proprietary MotionLock technology and ECO Weigh battery system for years of use and allows the scale to be used anywhere.

All Befour scales are **built to last,** constructed of anodized aluminum, backed by an **'industry leading' 3-year warranty** and are **Made in the USA.**

FEATURES & BENEFITS

Display Console: LB/KG lockout, programmable settings, BMI output, auto zero, recall, reweigh ability, and more

Large Stable Platform: Recessed non-skid mat and low step-up height

Built to Last: Rugged, non-corroding all-aluminum design weighing only 17 pounds

High Capacity: 750 pound capacity

MotionLock automatically facilitates quick & accurate weight, even for the most unsteady user – no intervention of the care provider or patient required

DISPLAY CONSOLE

Display is used across all Befour's medical scales: Seamlessly move from one model to another with ease

Displays weight, height, and BMI on a single screen

EMR connectivity via serial output or optional wireless module

Programmable User Settings can be set to auto-off, "Hands-Free" Weighing, etc.

'ECO Weigh' battery system provides 100,000 weighings per set of (4) D-cell alkaline batteries (included)

LB/KG Lockout: Toggle between or set to display only your desired unit of measure

3-segment battery life indicator

Large 1" LCD digits

No AC outlet or recharging needed

Physician Column Scale with BMI

MODEL MX305

SCALE SPECIFICATIONS	
SCALE HEIGHT	42”
PLATFORM DIMENSIONS	16” W x 18” D x 1-3/4” H
SYSTEM WEIGHT	17 lbs
WEIGHT CAPACITY	750 lbs (340 kg)
RESOLUTION	0.1 lb (0.05 kg)
ACCURACY	± 0.1 lb (0.05 kg)
POWER SOURCE	4 D-cell alkaline batteries (incl)
BATTERY LIFE	100,000 weighings
CONNECTIVITY	USB serial or optional wireless
DISPLAY READOUT	1” LCD digits
WARRANTY	3 years

SHIPPING SPECIFICATIONS	
PACKAGED WEIGHT	27 lbs
PACKAGE DIMENSIONS	Box (45” x 18” x 10”)
SHIPPING METHOD	UPS Package

DIMENSIONS

Allow 1” perimeter space - scale should not touch wall

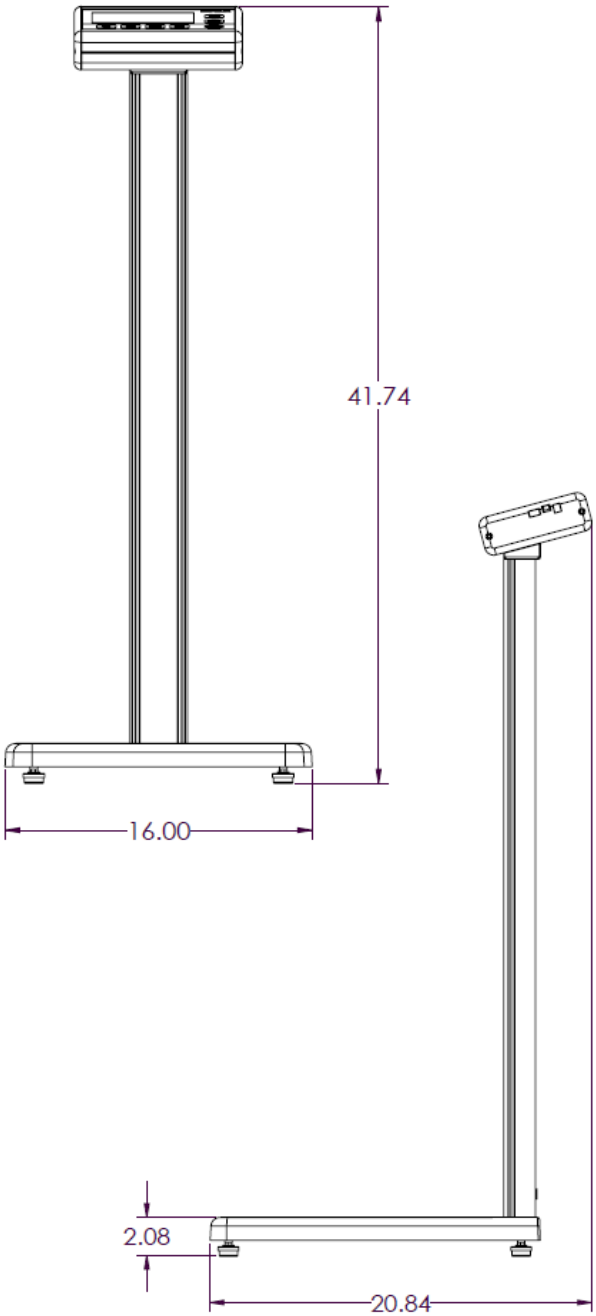

BEFOUR

Befour Inc. | 102 Progress Drive, Saukville, WI 53080 | 800.367.7109 | f: 262.284.5966 | befour.com | sales@befour.com