BEFOUR

PROFESSIONAL HEALTHCARE SCALES

Neonatal Pediatric Scale With 1 Gram Resolution

MODEL MX202

The MX202 pediatric scale was designed for the most accurate weighing of neonates and infants. The heavy-duty, all-metal, portable unit incorporates a large, removable acrylic cradle with visible length ruler for measurement.

With a standard **1 gram accuracy** and 45 pound (20kg) weight capacity means this scale can handle all infant care weighing needs. The accurate and repeatable readings are ideal for **diaper weighing** to determine breast-feeding intake or urine output.
Engineered for maximum mobility and safety, the scale has two large carrying handles.

The scale offers many ***advanced features which come standard,*** including Befour's proprietary MotionLock Technology and ECO Weigh battery system for years of use and allows the scale to be used anywhere.
All Befour scales are **built to last,** constructed of anodized aluminum, backed by an **'industry leading' 3-year warranty** and are **Made in the USA.**

1 gram resolution for diaper weighing

EMR READY

HANDS-FREE WEIGHING

FEATURES & BENEFITS

1 Gram Resolution: Comes STANDARD for extreme accuracy with every weight reading

Fully Assembled: Arrives ready for use; simply insert the provided cradle and batteries

LB/KG lockout: Quickly change setup to disable LB/GM button so scale will only weigh in selected unit of measure: GM, KG, or LB/OZ.

Auto-hold, reweigh, recall and programmable auto-off functions

MotionLock automatically facilitates quick & accurate weight, even for moving infants – no intervention of the care provider required

ENVIRONMENTALLY FRIENDLY · PROUDLY MADE IN THE USA · CERTIFIED SBA SMALL BUSINESS

OPTIONAL CART: CRT202

The MX202 Neonatal Scale becomes a self-contained mobile weighing station when used with optional cart.

- Two 24"W x 18"D shelves with 1/4" safety lip
- Four 4" casters (two locking)
- 200 pound weight capacity
- Rugged thermoplastic cart & painted steel cabinet
- Easy 10 minute assembly
- Lockable cabinet with built-in handle

Neonatal/Pediatric Scale with 1 Gram Resolution

MODEL MX202

SCALE SPECIFICATIONS

DIMENSIONS W/HANDLES	26”W X 16-1/2”D X 7”H
ACRYLIC CRADLE DIMENSIONS	24”W x 15”D x 3”H
SYSTEM WEIGHT	27 lbs
WEIGHT CAPACITY	20,000 grams (45lbs)
RESOLUTION	1 gram (to 10,000 grams)
	5 grams (10,001 to 20,000 grams)
	0.1 oz over entire range
ACCURACY	±1 gram (to 10,000 grams)
	±5 grams (10,001 to 20,000 grams)
	± 0.1 oz over entire range
POWER SOURCE	4 D-cell alkaline batteries (incl)
BATTERY LIFE	100,000 weighings
CONNECTIVITY	USB serial or optional wireless
DISPLAY READOUT	1” LCD digits
WARRANTY	**3 years**

SHIPPING SPECIFICATIONS (MX202)

PACKAGED WEIGHT	31 lbs
PACKAGE DIMENSIONS	Box (28” x 19” x 8”)
SHIPPING METHOD	UPS Package

DIMENSIONS

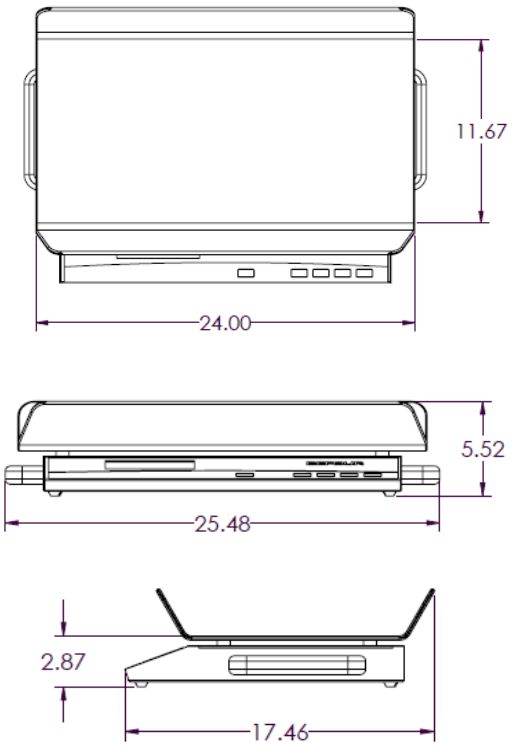

THREE DISPLAY OPTIONS:
Grams, Kilograms, or Pounds/Ounces

Grams

Kilograms

Pounds/Ounces

OPTIONAL: MX204
4-Sided Acrylic Cradle Available

BEFOUR

Befour Inc. | 102 Progress Drive, Saukville, WI 53080 | 800.367.7109 | f: 262.284.5966 | befour.com | sales@befour.com