BEFOUR

PROFESSIONAL HEALTHCARE SCALES

Portable Platform Scale with BMI

MODEL MX115

The MX115 is a versatile scale that is ideal for any environment where precision, accuracy, and maximum portability are desired.

Its quality and ease of use are perfect for visiting nurses, weight management clinics, and any situation where a lightweight system and high weight capacity are essential. Operation is simple and intuitive, even for the first time user.

The scale offers many **advanced features which come standard,** including Befour's proprietary MotionLock technology and ECO Weigh battery system for years of use and allows the scale to be used anywhere.

All Befour scales are **built to last,** constructed of anodized aluminum, backed by an **'industry leading' 3-year warranty** and are **Made in the USA.**

EMR READY

HANDS-FREE WEIGHING

FEATURES & BENEFITS

Pin point Accuracy of ± 0.1 lb.

High Capacity: 550 pounds

Built to Last: Rugged, non-corroding all-aluminum design weighing only 12 pounds

Fully Assembled: Arrives ready for use - simply insert the provided leveling feet and batteries

Body Mass Index: BMI calculator built in

Display Console: LB/KG lockout, programmable settings, BMI output, auto zero, recall, reweigh ability, and more

MotionLock

MotionLock automatically facilitates quick & accurate weight, even for the most unsteady user – no intervention of the care provider or patient required.

ENVIRONMENTALLY FRIENDLY · PROUDLY MADE IN THE USA · CERTIFIED SBA SMALL BUSINESS

DISPLAY CONSOLE

Display is used across all Befour's medical scales: Seamlessly move from one model to another with ease

Displays weight, height, and BMI on a single screen

EMR connectivity via serial output or optional wireless module

Programmable User Settings can be set to auto-off, "Hands-Free" Weighing, etc.

'ECO Weigh' battery system provides 100,000 weighings per set of (4) D-cell alkaline batteries (included)

LB/KG Lockout: Toggle between or set to display only your desired unit of measure

3-segment battery life indicator

Large 1" LCD digits

No AC outlet or recharging needed

Portable Platform Scale with BMI

MODEL MX115

SCALE SPECIFICATIONS

CONSOLE MOUNTING	Wall or tabletop
PLATFORM DIMENSIONS	13” W x 13” D x 1-3/4” H
SYSTEM WEIGHT	12 lbs
WEIGHT CAPACITY	550 lbs (250 kg)
RESOLUTION	0.1 lb (0.05 kg)
ACCURACY	± 0.1 lb (0.05 kg)
POWER SOURCE	4 D-cell alkaline batteries (incl)
BATTERY LIFE	100,000 weighings
CONNECTIVITY	USB serial or optional wireless
DISPLAY READOUT	1” LCD digits
WARRANTY	3 years

SHIPPING SPECIFICATIONS

PACKAGED WEIGHT	17 lbs
PACKAGE DIMENSIONS	Box (21” x 18” x 9”)
SHIPPING METHOD	UPS Package

Versatile Console:
Mounting brackets (attached) allow positioning on wall or angled on tabletop

DIMENSIONS

Allow 1” perimeter space - scale should not touch wall

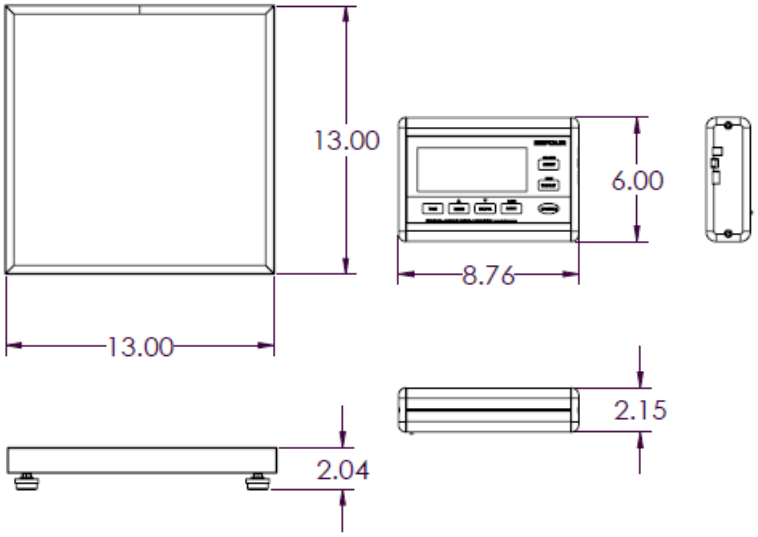

OPTIONAL CARRY CASES:

Soft-Sided Carry Case (SC1816)

Stores scale platform, display console and cables.
Extra pockets for documents & supplies.
Includes shoulder strap.

Hard-Shell Carry Case (HC-1825)

(Lockable) Heavy-duty polyethylene hard-shell case with custom-cut foam interior, designed for added safety during transport.

BEFOUR
Befour Inc. | 102 Progress Drive, Saukville, WI 53080 | 800.367.7109 | f: 262.284.5966 | befour.com | sales@befour.com